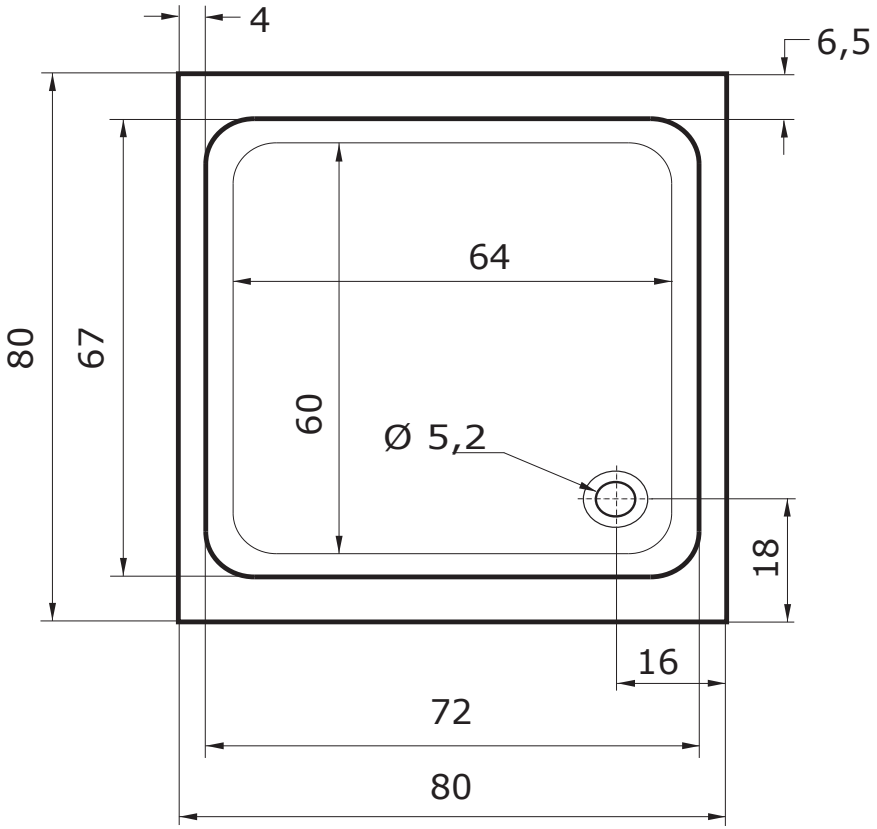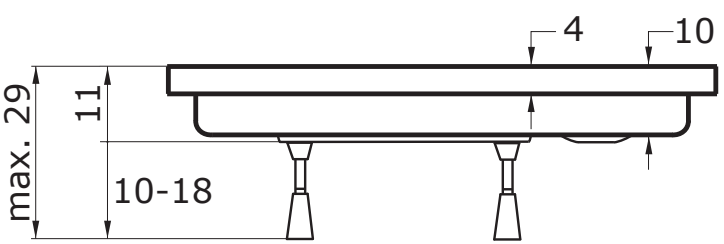STEFANI